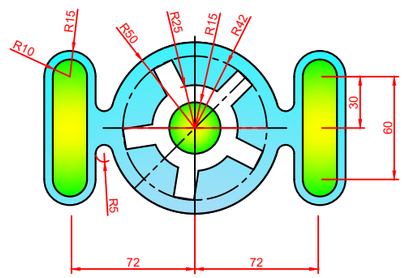
R10
R15
R50
R25
R15
R42
30
60
R5
72
72

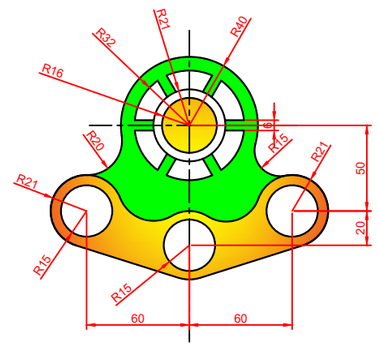
R32
R21
R40
R16
R20
R15
R21
R21
R15
R15
50
20
60
60

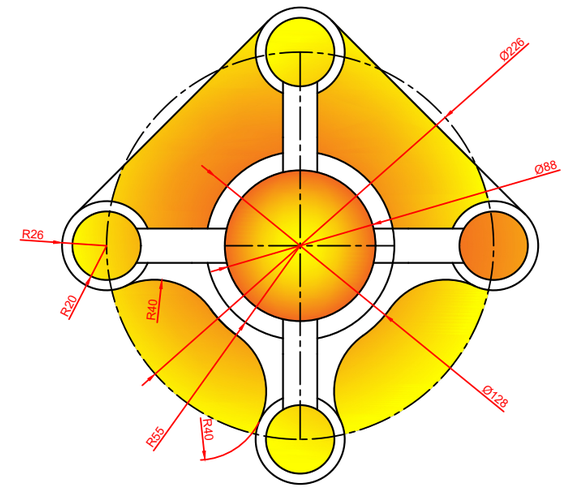
Ø226
Ø88
R26
R20
R40
Ø128
R55
R40

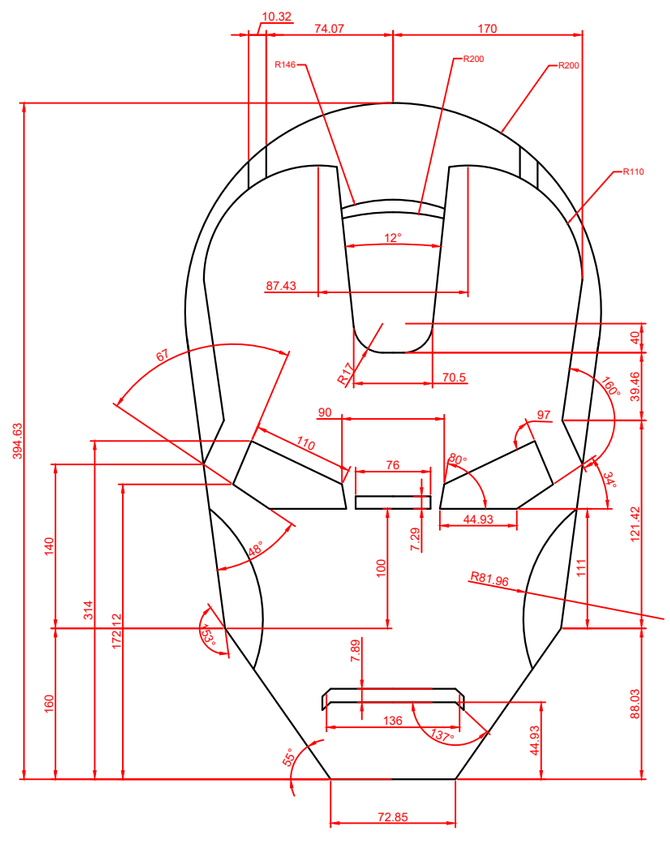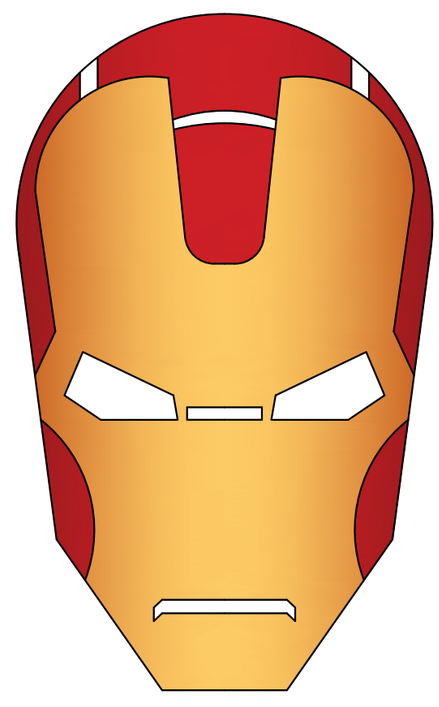
10.32
74.07
170
R146
R200
R200
R110
12°
87.43
40
67
R17
70.5
160°
39.46
394.63
90
97
110
76
80°
34°
44.93
121.42
140
48°
7.29
100
R81.96
111
314
172
112
53°
7.89
160
136
137°
44.93
88.03
55°
72.85